SEELEY INTERNATIONAL

Breezair By SEELEY INTERNATIONAL Supercool

TECHNICAL SPECIFICATIONS - TBS580

GENERAL SPECIFICATIONS:

CABINET and WATER RESERVOIR
The cabinet and water reservoir components are injection moulded structural foam polypropylene (Permatuf®). The cabinet and reservoir are UV stabilised and corrosion free. The major components clip together without additional fasteners. The pump is secured with two stainless steel screws.

FAN
The fan is a multi blade assembly constructed of glass reinforced polypropylene. The blades are aero-foil shaped. The fan is mounted to the motor shaft by means of a screw-on collet.

FAN MOTORS
Single phase, permanent split capacitor (P.S.C.) motors, with die-cast fully enclosed aluminium frame and IP24 rated enclosures designed to IEC60034. The motor and fan assembly are supported on the injection moulded ABS venturi ring by the stator blades. The fan motor is fitted with a polarised plug for quick removal and replacement in order to reduce the weight of the assembly for installation.

WEATHER SEAL
The weatherseal consists of two semi-circular, polypropylene blades, hinged and counterbalanced, to open automatically when the fan is activated, and to close when the fan is switched off. Latching is by magnets to steel striker plates.

MAIN CONNECTION DUCT
The main connection duct must incorporate a raw edge or safe edge to avoid fouling of the weatherseal.

ELECTRICAL CONTROL
The electrical control box is pre-wired within the cooler and incorporates an isolating switch.
A 3 metre long power supply cord is supplied as standard on all models. Provision is included for plug-in connection of drain valve and solenoid kits.
A 12 amp circuit breaker is fitted to the underside of the enclosure.

THERMOSTAT CONTROL
All TBS model coolers feature the Breezair thermostat, for fully automatic control. Connection of the thermostat to the control box is via the 20 metre low voltage cable supplied.

WATER CONNECTION
Water supply connection is via a flexible connector which is terminated with a 1/2" BSP compression nipple. An isolating valve must be fitted adjacent to the cooler for service. A drain-down facility is required in areas subject to freezing.
The patented water distribution system is an integral part of the lid, and can be readily viewed from the top by removing the pad frame assembly.

COOLING PADS
Cooling filter pads are Chillcel® fabricated, honeycomb, high efficiency type.

SPECIAL FEATURES
Supercool TBS series coolers are available in "Slate Grey" only.

AIR FLOW PERFORMANCE SUMMARY

Model	Airflow L/s (m³/h) @ 80Pa	Motor W	Air Flow - L/s (m³/h) versus Static Pressure (Pa)					
			0	40	60	80	100	120
TBS580	2780 (10010)	950	3170 (11410)	3000 (10800)	2900 (10440)	2780 (10010)	2660 (9580)	2520 (9070)

It is a policy of Seeley International to introduce continual product improvement. Accordingly specifications are subject to change without notice.

SEELEY INTERNATIONAL

Breezair By SEELEY INTERNATIONAL Supercool

TECHNICAL SPECIFICATIONS - TBS580

Specification		TBS580
Airflow @ 80Pa	(L/s)	2780
	(m^3h)	10010
Cooling Capacity*	(kW)	16.8
Power Consumption (total)	Power Max (W)	1260
	Current - Rated (A)	6.0
Power Supply	Voltage / Phases / Hz	220-240/1/50
Controller	Type	Digital
Fan	Type	Axial
	Diameter - External (mm)	541
	Capacity	High
Motor	Type	PSC
	Speed Max (rpm)	1360 VAR
	Output Max (W)	950
	Capacitor (uF/V)	30/440
	Overload	Auto Reset & 'one shot' fuse
	Enclosure Rating	IP24
Pump	Type	Centrifugal
	Motor	Synchronous
	Power - rated (W)	25
	Flow Rate (L/min)	21
	Voltage / Phases / Hz	230/1/50
	Overload	Auto Reset
	Enclosure Rating	IPX4
Cooling Pad Chillcel	Size (mm)	850x526Hx120 (4 pads)
	Pad Area (m^2)	1.79
Water	Tank Capacity (L)	23
	Inlet (mm/inches)	12.7mm 1/2" male BSP
	Drain (mm/inches) Configurable to local requirements	40mm $1^{1/2}$" male BSP
Shipping	Dimensions (mm) including pallet	1150x1150x902H
	Volume (m^3)	1.20
	Mass - Shipping (kg)	68
	Operating (kg)	91
Connecting Duct (raw edged)	Length & Width (mm)	550x550

* Cooling capacity measured to Australian Standard AS2913-2000, ambient of 38°C dry bulb & 21°C wet bulb, with room exit temperature of 27.4°C.

NATA WORLD RECOGNISED ACCREDITATION

Air flow performance has been measured in accordance with Australian Standard AS2913:2000 "Evaporative Air Conditioning Equipment" by Meridian Laboratories Pty Ltd

***Meridian Laboratories is registered by the National Association of Testing Authorities, Australia. The tests reported herein have been performed in accordance with its terms of registration. Registration No.: 3697**

TECHNICAL SPECIFICATIONS - TBS580

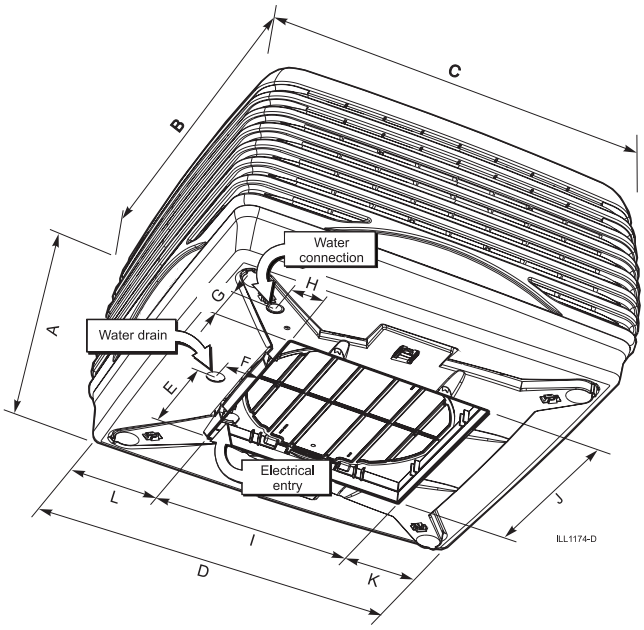

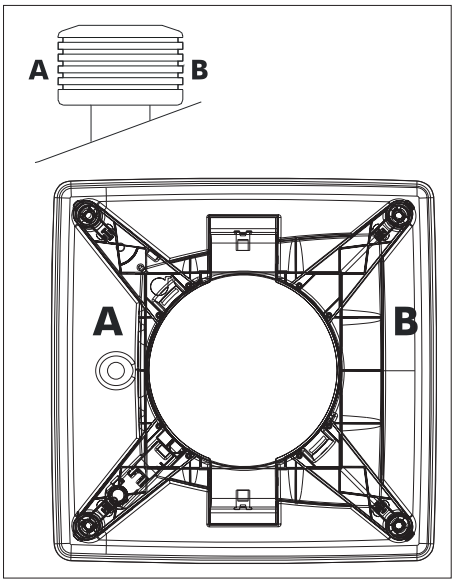

Model	A	B	C	D	E	F	G	H	I	J	K	L
TBS580	835 (32.9)	1150 (45.3)	1150 (45.3)	1080 (42.5)	275 (10.8)	95 (3.7)	82 (3.2)	82 (3.2)	555 (21.85)	555 (21.85)	249 (9.8)	279 (11.0)
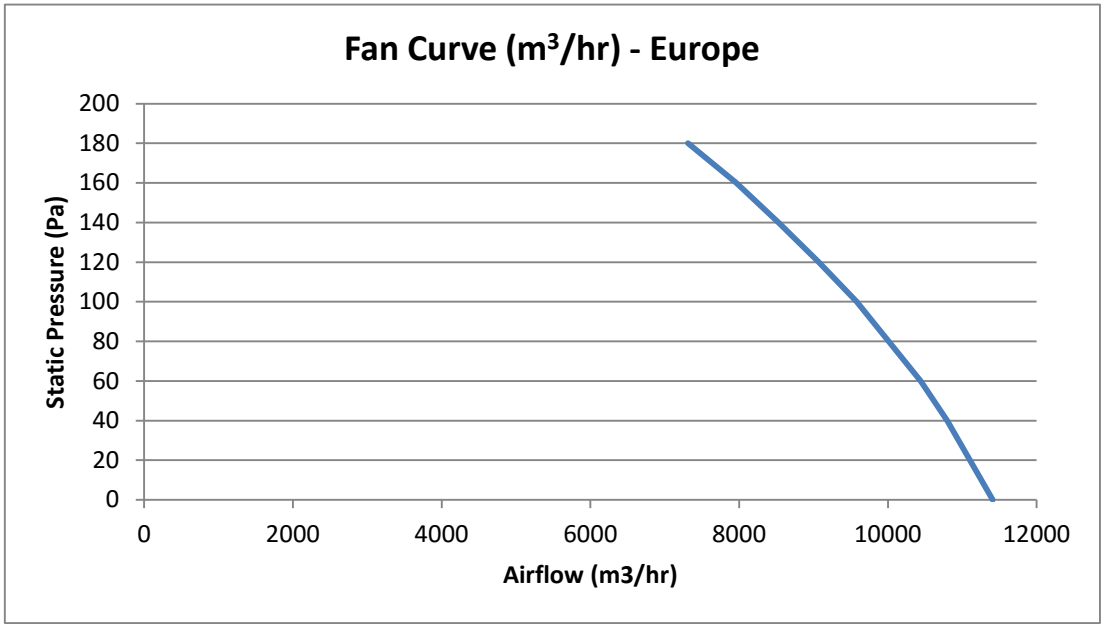
Dimensions are in mm (inches in brackets).