Breezair™ By SEELEY INTERNATIONAL

The Breezair TBQ 500

Reliability and quality

Permatuf™ corrosion-proof cabinet

The Breezair cabinet will not corrode or rust. The UV stabilised structural polymer material is the same type used to make acid baths, battery cases and some space satellite components. Plus, it's designed to blend with any property.

MagIQcool™ Controller (standard)

Operate one cooler from an easy to use, wall mounted thermostat controller. The controller comes with 20 m wiring loom, that can be extended up to a maximum length of 100 m.

Advanced touch screen MagIQtouch™ Controller (optional)

The technology includes in-built Installation Wizard, making the operating process simple. Coolers are supplied with a standard 20m cable (40m cable can be supplied as optional). to operate up to 60 coolers from a single MagIQtouch controller. Cable length between two coolers is subject to total cable path between MagIQtouch controller and last cooler being less than 500m.

Axial fan

The better the fan, the more efficient the system. This super powerful fan is designed to maximise performance and minimise noise. The purpose designed fans are inherently balanced, with aerofoil blades to provide energy efficient, high pressure performance.

MagIQtouch™ BMS Control interface (optional)

BMS interface as optional with analogue and digital inputs.

NEW BREAKTHROUGH Mini-Cell^ Chillcel® Pad Technology!

Dramatic improvement in cooling efficiency.

New enhanced small cell design, means that the Breezair range boasts a new cutting edge level of cooling capacity – up to 10% more than before.

New pad formulation has resulted in having 25% more surface area dramatically improving cooling efficiency.

The only evaporative cooling pads fully manufactured in Australia to suit the harshest climates, and now, the absolute over-performer!

^Patent pending

Totally enclosed motor

Breezair's fan motor is fully enclosed to international standards and excludes any moisture ingress from all sources. The advanced design is rigorously tested and completely reliable.

Non-clogging water distribution system

Breezair's non-clogging water distribution is one of the things that make it unique. The water distributor maximises cooling efficiency by supplying a continuous and balanced flow of water across the cooling pads. This is different to any other brand of evaporative coolers, which are subject to water flow variations for number of reasons. Breezair's balanced flow ensures highest evaporation efficiency and maximum cooling.

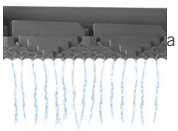

Tornado® water pump

Designed, manufactured and tested by Seeley International, the Tornado pump epitomises reliability. It features very safe material choices, an encapsulated motor with overload cut-out, stainless steel shafts and bearings fully protected from water. The strong synchronous motor has constant speed, independent of voltage fluctuations, and runs very cool.

Digital Smartbox™ / control power module

The Smartbox digital control module monitors and controls all of the cooler's features to provide ultimate comfort conditions, temperature sensing and water quality supervision – completely safely and reliably. The module also incorporates diagnostic features and memory to aid trouble-shooting and minimise downtime. Several user choice parameters are available to allow you to set up your preferred environment.

Technical specifications

		TBQ 500
Airflow @ 80Pa	Industry standard (m^3/h)	9760
Cooling capacity*	(kW)	13.3
Power consumption (total)	Watts max/min	1260 / 400
	Current max (amp)	5.7
Power supply	Voltage / Phases / Hz	220-240 / 1 / 50
Controller	Type	Digital
Fan	Type	Axial
	Dia (mm)	541
Motor	Type	PSC
	Speed max (rpm)	1350
	Output Watts max	750
	Overload & Fuse	Auto reset & 'one-shot' fuse
	Enclosure	IP54
Pump	Type	Centrifugal
	Motor	Synchronous
	Rating Watts (input)	25
	Flow rate (L/min)	21
	Voltage / Phases / Hz	230 / 1 / 50
	Overload	Auto reset
	Enclosure rating	IPX4
Cooling pad Chillcel	Size (mm)	850 x 526 (H) x 90 (4 pads)
	Pad area (m^2)	1.79
Water	Tank capacity (L)	23
	Inlet (mm / inches)	12.7 / ½" male BSP
	Drain (mm / inches)	40 / 1½" male BSP
Shipping	Dimensions including pallet (mm)	1150 x 1150 x 902 (H)
	Volume (m^3)	1.19
	Mass (kg)	68
	Operating (kg)	89
Connecting duct (raw edged)	Length x width (mm)	550 x 550

*Cooling capacity measured to Australian Standard AS2913-2000, ambient of 38°C dry bulb and 21°C wet bulb, with room exit temperature of 27.4°C.

25 Years Corrosion-free cabinets guarantee

10 Years Structural components guarantee

1 Year Pump, motor & electronic control module guarantee

CABINET DETAILS

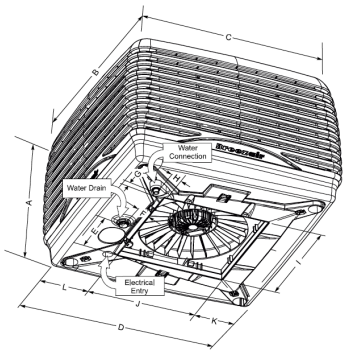

Model#	A	B	C	D	E	F	G	H	I*	J*	K	L
TBQ 500	835	1150	1150	1080	275	95	82	82	555	555	249	279

Note: All dimensions are in mm. *Dropper dimensions

FAN CURVE

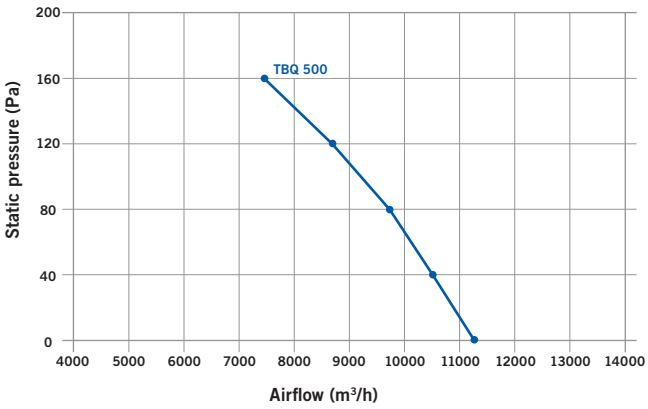

Model#	Industry STD Rating m^3/h @ 80Pa	Motor W	Certified Air Delivery (m^3/h) (static pressure Pa)				
			0	40	80	120	160
TBS 580	9760	750	11160	10550	9760	8680	7420

COOLER DISCHARGE AIR TEMPERATURE CHART

Ambient Dry Bulb Temperature °C	Ambient Relative Humidity %								
	10	20	30	40	50	60	70	80	90
10	2.7	3.6	4.5	5.4	6.2	7.0	7.8	8.5	9.3
15	6.2	7.3	8.4	9.4	10.5	11.4	12.4	13.3	14.2
20	9.5	10.9	12.2	13.5	14.7	15.9	17.0	18.1	19.0
25	12.6	14.4	16.0	17.5	19.0	20.3	21.6	22.8	23.9
30	15.8	17.9	19.8	21.6	23.2	24.7	26.2	27.5	28.8
35	18.8	21.3	23.6	25.6	27.5	29.2	30.8	32.3	33.7
40	21.9	24.8	27.4	29.7	31.8	33.7	35.5	37.1	38.6
45	24.8	28.2	31.2	33.8	36.1	38.2	40.1	41.9	43.5
50	27.8	31.7	35.0	37.9	40.5	42.7	44.8	46.7	48.4

This chart represents approximate air temperatures based on cooling performance at sea level. From tests carried out to Australian Standard 2913.

Breezair™ By SEELEY INTERNATIONAL

eurosales@seeleyinternational.com

www.seeleyinternational.com

SEELEY INTERNATIONAL

Seeley International France
320 Avenue Berthelot
69371 Lyon Cedex 08
France
Phone: +33 (0) 472 7847 80

Seeley International Italy
Loc.Policiano 72/M
52100 Arezzo Italy
Phone: +39 (0) 575 97189

Seeley International UK
Unit 11 Byron Business Centre,
Duke Street
Hucknall Nottingham
NG15 7HP United Kingdom
Phone: +44 (0) 115 9635630

Certified System Quality ISO 9001

Cat no. IN TBQ500 REV B (1118). Information was correct at the time of preparation. E & OE.